TM SOLDERING SOLUTIONS

TM Soldering Solutions

Introducing the ***PHOENIX*** Selective Soldering Machine designed to elevate your manufacturing processes. Engineered with precision and efficiency in mind, the ***PHOENIX*** offers unparalleled accuracy in applying solder to specific components on PCB's, significantly reducing the risk of defects and improving overall quality. The ***PHOENIX*** is equipped with the new ***EmberX*** software controls, enabling seamless integration into existing production lines and offering user-friendly interface for effortless operation. With its superior performance and reliability, the ***PHOENIX*** is designed to ensure your products meet the highest standards of excellence.

Standard Features:

- ***Windows™ 11*** operating system with the ***EmberX*** Software
- ***Dual Monitors*** For simultaneous video feed
- ***Fiducial recognition*** for automatic position and rotation correction
- ***HD1080p Cameras*** for high resolution process viewing and PCB programming
- ***Offline Programming***
- ***Automated wave height check/adjust***
- ***Atomizing flux applicator***
- ***Lead alloy solder pot and pump assembly*** (lead free available)
- ***Automated solder level verification***
- ***Warranty*** one year covering the entire machine

Model **PHOENIX**

Manual Load Selective Soldering Machine 24" x 20"

(600mm x 500mm)

The ***PHOENIX*** performs the soldering process by holding the PCB stationary while a high-precision XYZ axis mechanism executes the flux and soldering procedures with flawless accuracy. This fully automated selective soldering machine features the mini-solder wave technology, delivering exceptional performance and consistency

The ***PHOENIX*** excels at fluxing and soldering through-hole components on SMT boards, even in close proximity to adjacent components. This innovative machine eliminates the limitations and high labor costs associated with operator-dependent soldering, thanks to its flexible, fully automated flux application and molten solder delivery system.

The ***PHOENIX*** seamlessly combines high throughput with precise process controls, ensuring top-tier performance. Its programmable features allow for meticulous setting of all process parameters, including travel distances and speeds, solder temperature, wave height, pre-heat dwells, and immersion depths. Once configured, the system guarantees consistent, repeatable results with pinpoint accuracy.

Available Options:

- ***Top Side IR Preheat***
- ***Precision Micro Drop Fluxer***
- ***Lead Free Alloy Pot & Pump***
- ***Dual Nozzle Pot & Pump (Lead & Lead Free)***
- ***3" Wave Pump for Lead and Lead-Free Applications***
- ***Custom Fixtures and Nozzles***
- ***Automated Solder Level Fill***

TM Soldering Solutions
Phone: 509-638-1118
Email: Sales@tmssolutions.us
www.tmsolderingsolutions.com

Made in America

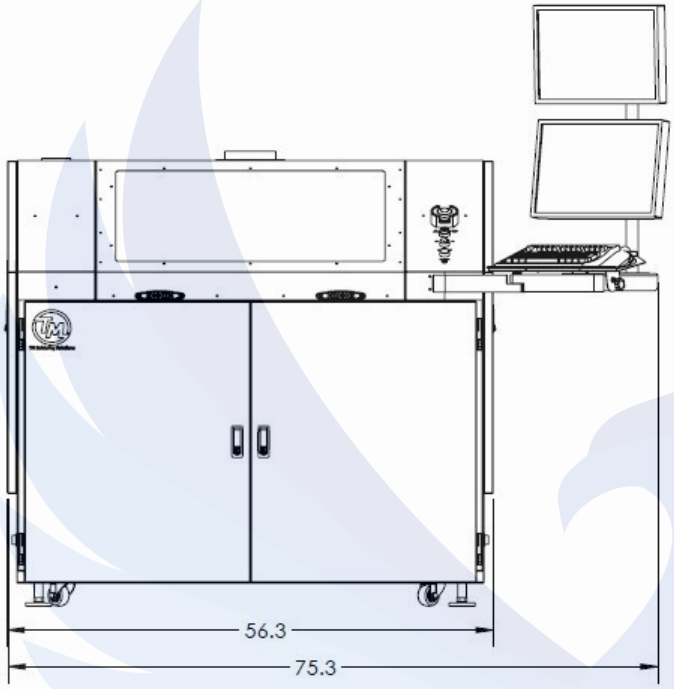

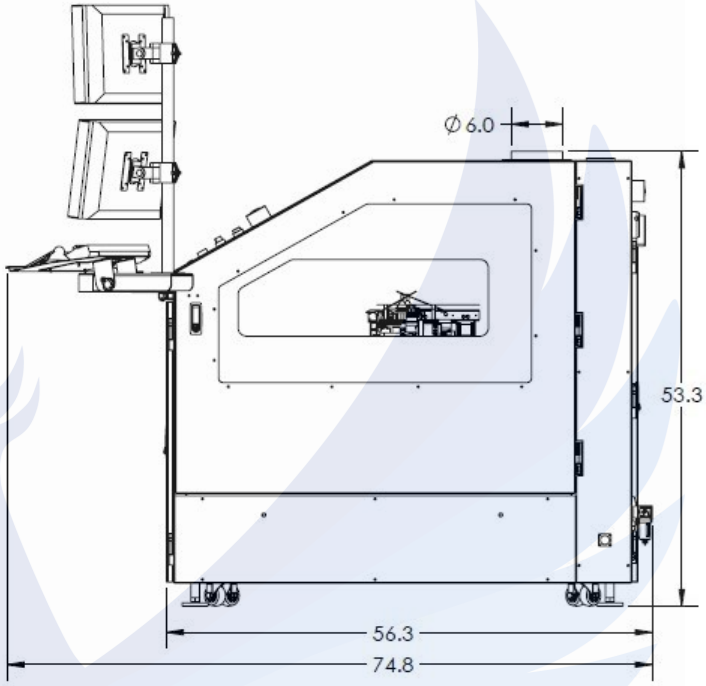

Dimension:	
Length:	56.3” 1430mm
Depth:	56.3” 1430mm
Height:	53.4” 1356mm
Weight:	1200 Lbs.

Solder Pot:	
Solder Pot Material:	316 SST
Solder Pot Material:	Optional Titanium for LF
Solder Nozzle:	Conical Single Point
Solder Nozzle Dia.	Range 3mm-25mm
Solder Volume:	27 Lbs. Lead 24 Lbs. LF
Solder Temperature:	Max 350°C
Heating Time:	Approx 75 Min.

Fluxer:	
Spray Fluxer:	XYZ controllable
Spray Width:	7-25mm
Micro Jet Fluxer:	Optional
Flux reservoir:	500 ml (16 oz)

Preheat Module: Optional	
Heaters:	Top Side IR
Temperature Range:	0-120°C
Board Coverage:	24” x 20”

Nitrogen:	
Supply:	Customer Supplied
Purity (%):	99.999
Consumption SCFH:	30 Single/50 Dual Nozzle
Min/Max PSI:	60 Min 90 Max

Batch Rail:	
Edge Clearance:	3mm
Min Opening:	2”
Max Opening:	20”
Max Pallet/PCB board:	12 Lbs
Board Clearance:	3” below/4” above

Air:	
Compressed Air:	Customer Supplied
Min/Max PSI:	90 Min 120 Max

Exhaust:	
Exhaust Flange:	1 ea. at 6” Dia.
Exhaust Draw:	Customer supplied
Min Draw Required:	150 m³/h (90 SCFM)

Control:	
Computer:	64 Bit
Microsoft™ OS:	Windows 11 Pro
Password Controlled	Optional
Dual Monitors:	UHD 2K
Online Teach Camera:	1080P HD
Daily Solder Scheduler:	Included

Electrical:	
Power:	208-240V 3 wire
Frequency:	50/60 Hz
Breaker:	50 AMP

TM Soldering Solutions

Phone: 509-638-1118
Email: Sales@tmssolutions.us
www.tmsolderingsolutions.com

Made in America